The evolution of flexibility

versatile – compact – essential

Raytech®

ORIGINAL MADE IN ITALY PRODUCT

CABLE ACCESSORIES COMPANY





RAY Jolly

one for all





RAYJolly is the one-way accessory for cables connected with 450 V connectors. Ready to use and very quick to install, it is supplied complete with pre-cross-linked silicone sealant gel, to ensure maximum insulation and sealing in the presence of water. Always re-opening and inspectable.

UV resistant

Underground use

Fully submersible

RAYJolly it is made of POLYPROPYLENE, a chemically resistant and 100% recyclable material and pre-filled with a highly sealing and insulating VISCOELASTIC GEL compliant with the REACH regulation and free of substances classified as hazardous according to the current CLP legislation.

- ✓ Resistant to mould and UV rays
- ✓ Complies with EN 50393 as far as applicable
- ✓ No shelf life
- ✓ Halogen-free GEL

ELECTRICAL PERFORMANCES:

- Operating Temperature: 90°
- Working temperature: -40°C / +50°C
- Self-extinguishing according to UL 94-V2 standard

The evolution of flexibility: *Ideal for connecting cables with various types of connectors/terminals*

max Ø 9,5 mm

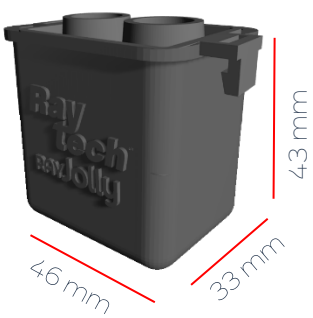

3 lever connectors 2x2,5 mm²



3x2,5 mm²



3x2,5 mm²



Art. RayJolly



Art. RayJollyL



Art. RayJollyM





Product	Item	Pack of	Description
RAY JOLLY	RAYJOLLY	Blister of 3 pcs.	3 insulating/sealing accessories
RAY JOLLY MP	RAYJOLLYMP	Multipack of 20 pcs.	20 insulating/sealing accessories
RAY JOLLY L	RAYJOLLYL	Blister of 1 pc.	1 insulating/sealing accessory, 3 lever connectors 2x2,5 mm² – 450 V
RAY JOLLY L MP	RAYJOLLYLMP	Multipack of 20 pcs.	20 insulating/sealing accessories, 60 lever connectors 2x2,5 mm² – 450 V
RAY JOLLY M	RAYJOLLYM	Blister of 1 pc.	1 insulating/sealing accessory, 1 screw terminal 3x2,5 mm² – 450 V
RAY JOLLY M MP	RAYJOLLYMMP	Multipack of 20 pcs.	20 insulating/sealing accessories, 20 screw terminals 3x2,5 mm² – 450 V

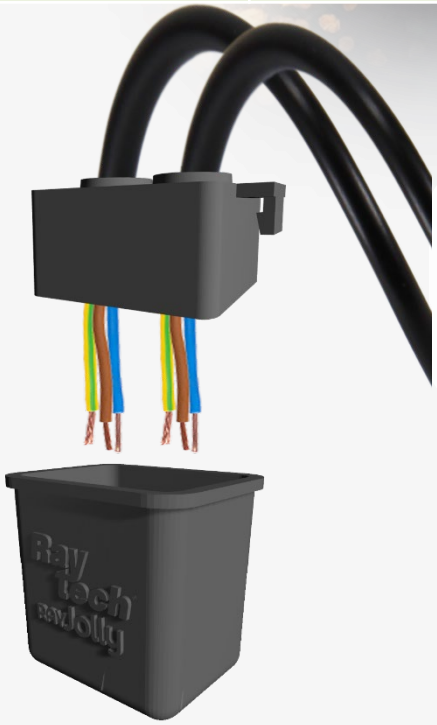

Quick and easy installation

1. Insert the cables and unsheathe
2. Connect the phases using the connectors included in the kit or the ones compatible by size
3. Close



DO NOT REMOVE the GEL that comes out of the cable entry, as it ensures correct insulation.

RAY Jolly
one for all

CAN BE USED WITH VARIOUS TYPES OF CONNECTORS/TERMINALS AND INSULATED WIRES





2x2x4 mm²
2x2x6 mm²



2x3x4 mm²

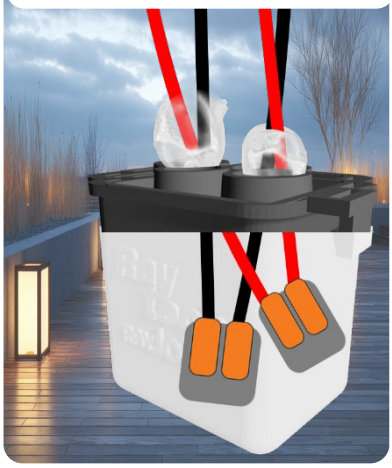



Up to
1x5x4 mm²





Up to
3x3x2,5 mm²
3x2x4 mm²





3x2,5 mm²



Raytech
CABLE ACCESSORIES COMPANY

ORIGINAL MADE IN ITALY PRODUCT

Raytech S.r.l.
Via E. Fermi 11/13/17 - 20019 Settimo Milanese (MI) – Italy
T: +39.02.33500147 www.raytech.it